AudioWind
Electronics-Salon

E-106AU

12 Position LED Electronic Lucky Rotary Board Kit.

This is an intuitive, simple and inexpensive circuit kit，both exercise your soldering skills, also profound learning PIC MCU program, will attract and enhance students' interest in learning.

Based on the Microchip PIC12F508 MCU design, before shipping we have poured into program “LED Electronic Lucky Rotary”. this is a flash microcontroller, if you are familiar with PIC firmware, you can modify or redesign the program.

The item unassembled, you must soldering and assembly. included battery holder and snap wire, but not include battery.

PCB diameter: 75mm / 2.95 inch

Operating voltage: DC4.5V, 3x AA batteries.

Youtube video link: https://youtu.be/tMTyOIp4dVk

PIC12F508 MCU Datasheet Link:

http://www.microchip.com/wwwproducts/Devices.aspx?product=PIC12F508

Schematic:

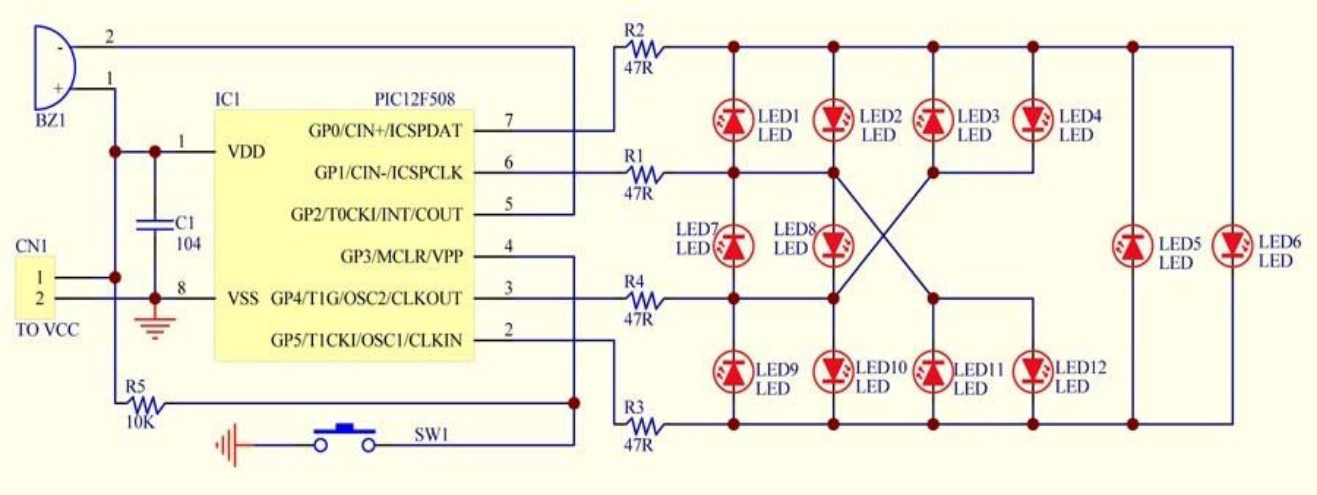

Battery holder/wire connect:

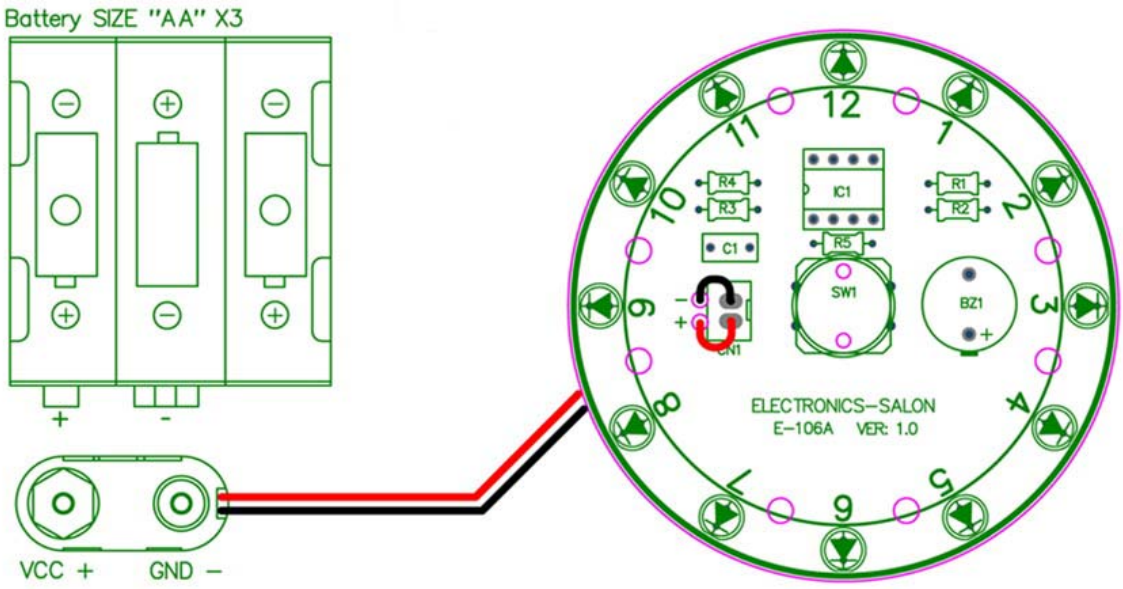

PCB dimension:

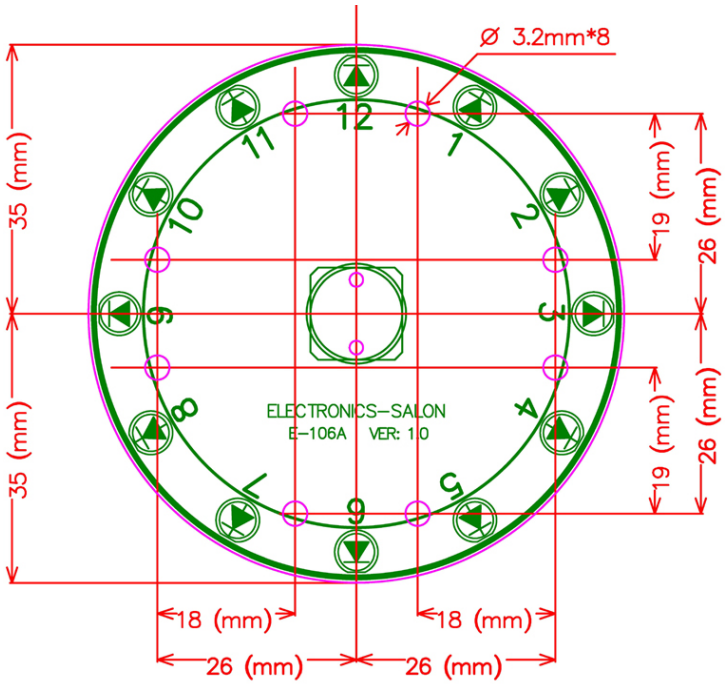

PCB Layout:

Top Layer

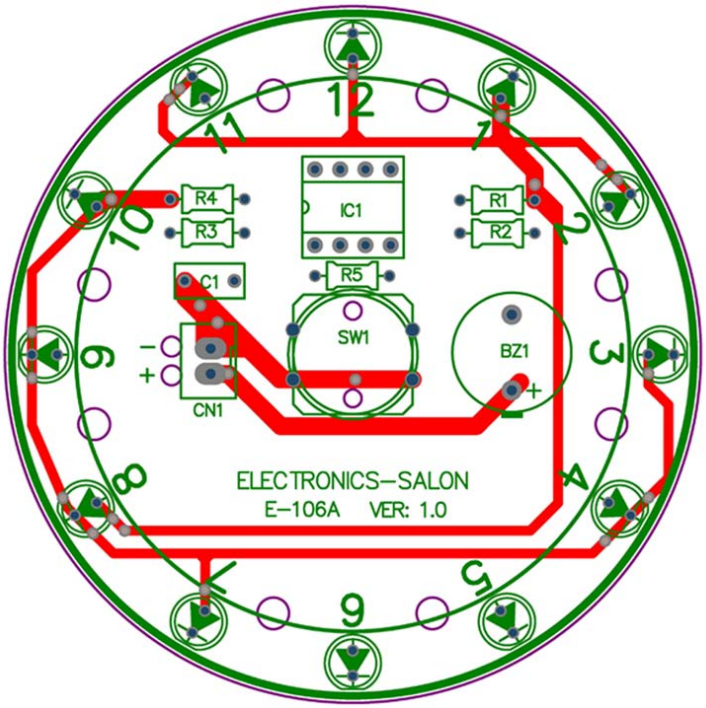

Bottom Layer

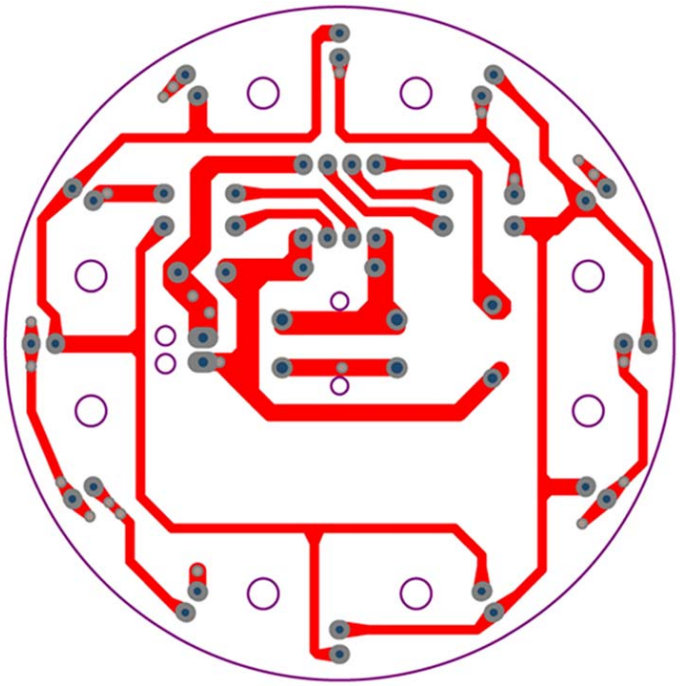

Bill of Material:

Parts	Description	Position	Quantity	Marking code
IC PIC12F508	DIP-8, 8-Bit Flash Microcontroller		1	Microchip,12F508
IC Socket	DIP-8, IC Socket	IC1	1	
R 10K ohm	Carbon film 5%, 1/4W	R5	1	Brown, Black, Orange, Gold
R 47 ohm	Carbon film 5%, 1/4W	R1~R4	4	Yellow, Purple, Black, Gold
C 100nF/100V	Metal film, 5%	C1	1	104J 100V
Buzzer	D=12mm	BZ1	1	TMB12A05
LED	Light Emitting Diodes D=5mm	1~12	12	Red
Button switch	12*12mm	SW1	1	OMRON BF3
Knob	D=12mm		1	Red
Battery holder	3x AA		1	Size "AA"
Snap wire	L=140mm	CN1	1	
PCB			1	Electronics-salon E-106A VER:1.0

Note:

LED and Buzzer watch the polarity.
IC socket and IC PIC12F508 check the position of notch direction.
The snap wire should be soldered into the “CN1” terminal. The red wire must go to the “+” terminal and the black wire must go to the “–” terminal.

Source code:

```
; project :       E-106A, 12 Position LED Electronic Lucky Rotary Board Kit.
; date :          2015.3.18
;decice :         PIC12F508
;******CONFIG SCL******************************
;COPY MPLAB IDE CONFIGURATION BITS SET CODE VALUE
    __config   0FE6H
; ******SPECIAL FUNCTION REGISTER*********
TMR0            EQU         01H
```

```
Z                   EQU         02H
C                   EQU         0H
DC                  EQU         1H
STATUS              EQU         03H
GPIO                EQU         06H
PCL                 EQU         02H
;*********General Purpose Registers***************
          cblock 07h
KEY_FLAG
KEY_DELAY_TIME
ADD1
ADD2
WAIT_FLAG
BUZZ_FLAG
BUZZ_TIME_COUNT
TIME_COUNT1
TIME_COUNT2
RONDOM_DATA
RONDOM_DATA_BUFF
RONDOM_STOP_FLAG
OUT_TIME_DATA_BUFF
OUT_DATA_BUFF
RUN_COUNT
RUN_COUNT_1
LED_ON_COUNT
TIME_1MS_DATA_REG1
DELAY_1MS_FLAG
           endc
;***********I/O FUNCTION SET ****************
#define SET_SW       GPIO,03H
#define BUZZ         GPIO,02H
;*************TIME DATA SET *****************
#define        BUZZ_TIME_DATA              .5
#define        KEY_LONG_PAUSE_TIME         .20
#define        KEY_DELAY_TIME_DATA         .39
#define        LOOP_TIME_DATA              .4
;***********   PROGRAM START   *************
             ORG          000H
             MOVWF        05H          ;OSCCAL adjust
             CLRWDT
             GOTO         MAIN
;*****************************************************
IO_direction
             CLRWDT
             MOVF         ADD1,0
             ADDWF        PCL,1
             NOP
             RETLW        B'00111000'      ;LED1
             RETLW        B'00111000'      ;LED2
```

```
            RETLW       B'00101010'       ;LED3
            RETLW       B'00101010'       ;LED4
            RETLW       B'00011010'       ;LED5
            RETLW       B'00011010'       ;LED6
            RETLW       B'00101001'       ;LED7
            RETLW       B'00101001'       ;LED8
            RETLW       B'00001011'       ;LED9
            RETLW       B'00001011'       ;LED10
            RETLW       B'00011001'       ;LED11
            RETLW       B'00011001'       ;LED12
LED_OUT_DATA          CLRWDT
            MOVF        ADD1,0
            ADDWF       PCL,1
            NOP
            RETLW       B'00000110'        ;LED1    ON
            RETLW       B'00000101'        ;LED2    ON
            RETLW       B'00010100'        ;LED3    ON
            RETLW       B'00000101'        ;LED4    ON
            RETLW       B'00100100'        ;LED5    ON
            RETLW       B'00000101'        ;LED6    ON
            RETLW       B'00010100'        ;LED7    ON
            RETLW       B'00000110'        ;LED8    ON
            RETLW       B'00100100'        ;LED9    ON
            RETLW       B'00010100'        ;LED10 ON
            RETLW       B'00100100'        ;LED11 ON
            RETLW       B'00000110'        ;LED12 ON
LED_ON_TIME_DATA
            CLRWDT
            MOVF        ADD2,0
            ADDWF       PCL,1
            NOP
            dt     .6,.6,.6,.6,.6,.6,.6,.6,.6,.6,.6,.6
            dt     .7,.7,.7,.7,.7,.7,.7,.7,.7,.7,.7,.7
            dt     .8,.8,.8,.8,.8,.8,.8,.8,.8,.8,.8,.8
            dt     .10,.10,.10,.10,.10,.10,.10,.10,.10,.10,.10,.10
            dt     .11,.11,.12,.12,.12,.13,.13,.13,.14,.14,.15,.16
            dt     .17,.19,.21,.23,.25,.27,.29,.30,.31,.32,.33,.34
;*********************************************
MAIN        NOP
            MOVLW       B'00111111'
            TRIS        GPIO
            MOVLW       B'11000111'
            OPTION
            CLRF        GPIO
            CLRF        KEY_FLAG
            CLRF        ADD1
            CLRF        ADD2
            MOVLW       .12
            MOVWF       ADD1
```

```
            MOVWF       RONDOM_DATA
            MOVWF       LED_ON_COUNT
            BSF         WAIT_FLAG,0H
            BSF         RONDOM_STOP_FLAG,0H
            BSF         BUZZ_FLAG,0H
            BSF         BUZZ_FLAG,1H
            BSF         DELAY_1MS_FLAG,0H
            CLRF        TMR0
;**********KEYSCAN********************
KEYSCAN     CLRWDT
            BTFSS       KEY_FLAG,0H
            GOTO        K1
            BTFSS       SET_SW
            GOTO        $+3
            CLRF        KEY_FLAG
            GOTO        OUTPUT1
            BTFSC       KEY_FLAG,3H
            GOTO        OUTPUT1
            MOVF        ADD2,0
            XORLW       KEY_LONG_PAUSE_TIME
            BTFSS       STATUS,Z
            GOTO        OUTPUT1
            CLRF        ADD2
            BSF         KEY_FLAG,3H
            GOTO        OUTPUT1     ;
K1          BTFSC       SET_SW
            GOTO        OUTPUT1
            BTFSC       KEY_FLAG,1H
            GOTO        $+4
            BSF         KEY_FLAG,1H
            MOVLW       KEY_DELAY_TIME_DATA
            MOVWF       KEY_DELAY_TIME
K2          CLRWDT
            BTFSS       DELAY_1MS_FLAG,0H
            GOTO        OUTPUT1
            DECFSZ      KEY_DELAY_TIME,1
            GOTO        OUTPUT1
            BTFSS       SET_SW
            GOTO        K3
            CLRF        KEY_FLAG
            GOTO        OUTPUT1
K3          BSF         KEY_FLAG,0H
            BSF         KEY_FLAG,2H
            CLRF        RONDOM_DATA
            CLRF        ADD2
            CLRF        RUN_COUNT
            CLRF        RUN_COUNT_1
            BCF         RONDOM_STOP_FLAG,0H
            BCF         WAIT_FLAG,0
```

```
            MOVF        LED_ON_COUNT,0
            XORLW       .12
            BTFSS       STATUS,Z
            GOTO        $+4
            MOVLW       1H
            MOVWF       LED_ON_COUNT
            GOTO        $+2
            INCF        LED_ON_COUNT,1
;********LED SCAN OUTPUT**************
OUTPUT1    CLRWDT
            BTFSS       DELAY_1MS_FLAG,0
            GOTO        LOOP1
;****led stop rondom data generator***
            INCF        RONDOM_DATA_BUFF,1
            MOVF        RONDOM_DATA_BUFF,0
            XORLW       .13
            BTFSS       STATUS,Z
            GOTO        $+3
            MOVLW       1H
            MOVWF       RONDOM_DATA_BUFF
;****LED SCAN DISPLAY*****************
            MOVLW       0FFH
            MOVWF       GPIO
            CALL        IO_direction
            TRIS        GPIO
            MOVLW       0FFH
            MOVWF       GPIO
            CALL        LED_OUT_DATA
            MOVWF       OUT_DATA_BUFF
            MOVF        ADD1,0
            XORWF       LED_ON_COUNT,0
            BTFSC       STATUS,Z
            GOTO        OUT2
            BTFSS       BUZZ_FLAG,1H
            GOTO        $+4
            MOVLW       B'00000100'
            MOVWF       GPIO
            GOTO        $+3
            MOVLW       B'00000000'
            MOVWF       GPIO
            GOTO        OUT3
OUT2        MOVF        OUT_DATA_BUFF,0
            MOVWF       GPIO
            BTFSC       BUZZ_FLAG,1H
            GOTO        OUT3
            BCF         OUT_DATA_BUFF,2H
            MOVF        OUT_DATA_BUFF,0
            MOVWF       GPIO
OUT3        BTFSC       BUZZ_FLAG,0H
```

```
        GOTO        $+4
        BSF         BUZZ_FLAG,0H
        MOVLW       BUZZ_TIME_DATA
        MOVWF       BUZZ_TIME_COUNT
        BTFSC       RONDOM_STOP_FLAG,0H
        GOTO        $+2
        GOTO        LOOP3
        MOVF        ADD1,0
        XORWF       RONDOM_DATA,0
        BTFSS       STATUS,Z
        GOTO        LOOP3
        MOVF        LED_ON_COUNT,0
        XORWF       RONDOM_DATA,0
        BTFSS       STATUS,Z
        GOTO        LOOP3
        BSF         WAIT_FLAG,0H
LOOP3   BCF         DELAY_1MS_FLAG,0H
;************1ms TIMER ************************
LOOP1     CLRWDT
        MOVLW       LOOP_TIME_DATA
        MOVWF       TIME_1MS_DATA_REG1
        MOVF        TMR0,0
        SUBWF       TIME_1MS_DATA_REG1,0
        BTFSC       STATUS,Z
        GOTO        $+3
        BTFSC       STATUS,C
        GOTO        LOOP1
        CLRF        TMR0
        BSF         DELAY_1MS_FLAG,0H
;****************************************************
        CLRWDT
        INCF        RUN_COUNT_1,1
        INCF        ADD1,1
        MOVLW       .12
        SUBWF       ADD1,0
        BTFSC       STATUS,Z
        GOTO        $+5
        BTFSS       STATUS,C
        GOTO        $+3
        MOVLW       .1
        MOVWF       ADD1
        MOVLW       .8
        XORWF       RUN_COUNT_1,0
        BTFSS       STATUS,Z
        GOTO        KEYSCAN
        CLRF        RUN_COUNT_1
;**********BUZZ   OFF **************************
        BTFSC       BUZZ_FLAG,1H
        GOTO        B1
```

```
        DECFSZ    BUZZ_TIME_COUNT,1
        GOTO      B1
        BSF       BUZZ
        BSF       BUZZ_FLAG,1H
        CLRF      BUZZ_TIME_COUNT
B1      BTFSC     WAIT_FLAG,0H
        GOTO      KEYSCAN
;*****************************************************
B2      INCF      RUN_COUNT,1
        CALL      LED_ON_TIME_DATA
        XORWF     RUN_COUNT,0
        BTFSS     STATUS,Z
        GOTO      KEYSCAN
        CLRF      RUN_COUNT
        CLRF      BUZZ_FLAG
        INCF      ADD2,1
        MOVF      LED_ON_COUNT,0
        XORLW     .12
        BTFSS     STATUS,Z
        GOTO      $+4
        MOVLW     1H
        MOVWF     LED_ON_COUNT
        GOTO      $+2
        INCF      LED_ON_COUNT,1
        BTFSC     RONDOM_STOP_FLAG,0H
        GOTO      KEYSCAN
        BTFSS     KEY_FLAG,2H
        GOTO      $+7
        MOVF      ADD2,0
        XORLW     .10
        BTFSS     STATUS,Z
        GOTO      KEYSCAN
        CLRF      ADD2
        GOTO      KEYSCAN
        MOVF      ADD2,0
        XORLW     .60
        BTFSS     STATUS,Z
        GOTO      $+4
        MOVF      RONDOM_DATA_BUFF,0
        MOVWF     RONDOM_DATA
        BSF       RONDOM_STOP_FLAG,0H
        CLRWDT
        GOTO      KEYSCAN
        END
```