# AudioWind
# Electronics-Salon

**Negative Voltage Output Adjustable Regulator Module**

Model: A-290/LM

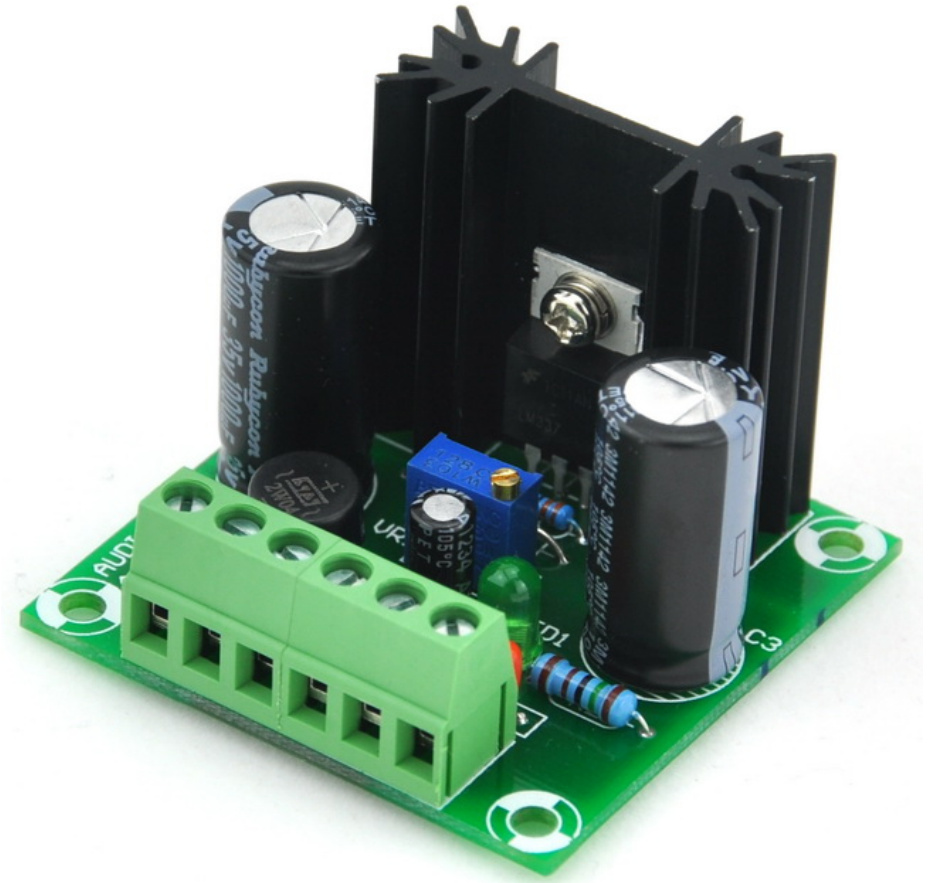

# Negative Voltage Output Adjustable Regulator Module

**Based on LM337 IC design**

Input Voltage:

DC -4.5 to -32V.

or AC 4 to 23.5V (transformer no-load voltage must be less than 23.5V).

Output Voltage:

-1.5 to (VinDC + 3)V DC, lowest -29V DC.

Max. Output Current:

5 / (VinDC – VoutDC) Amp, up to -1.5 Amp.

Note: VinDC == DC input voltage, VoutDC == DC output voltage.

If is AC input, please according the following formula to calculate:

VinDC = -((VinAC x 1.414) - 1.4)

Size:

PCB size: 50 x 50mm / 1.97 x 1.97 inch.

Module size (W x L x H): 50 x 50 x 38 mm (1.97 x 1.97 x 1.5 inch)

Weight:

45 +/-5 gram

This is a very typical LM337 regulator circuit, other electrical specifications please read the IC datasheet:

http://www.fairchildsemi.com/ds/LM/LM337.pdf

Any questions feel free to tell me::

Jianglily2005@gmail.com

## PCB Size and Wring Diagram:

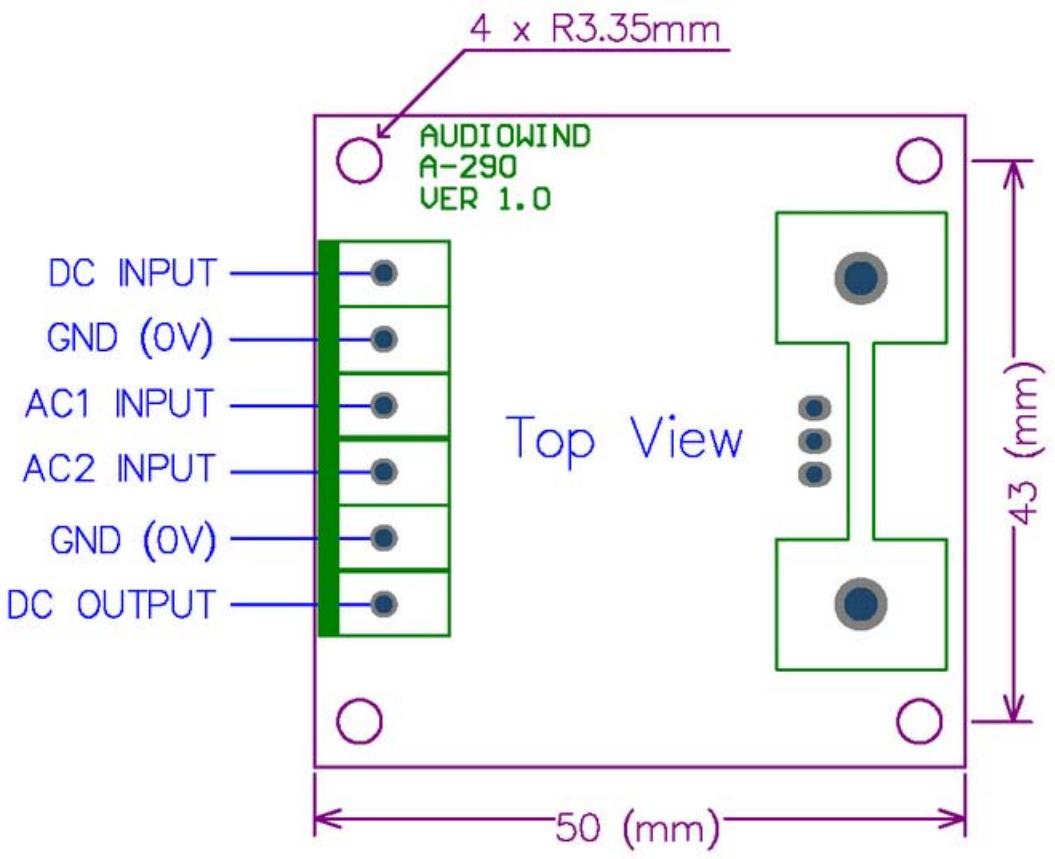


DC INPUT: Negative DC voltage input.

GND (0V): DC input ground (0V).

AC1 INPUT: AC input 1.

AC2 INPUT: AC input 2.

GND (0V): DC output ground (0V).

DC OUTPUT : Regulated negative DC voltage output.

Schematic:

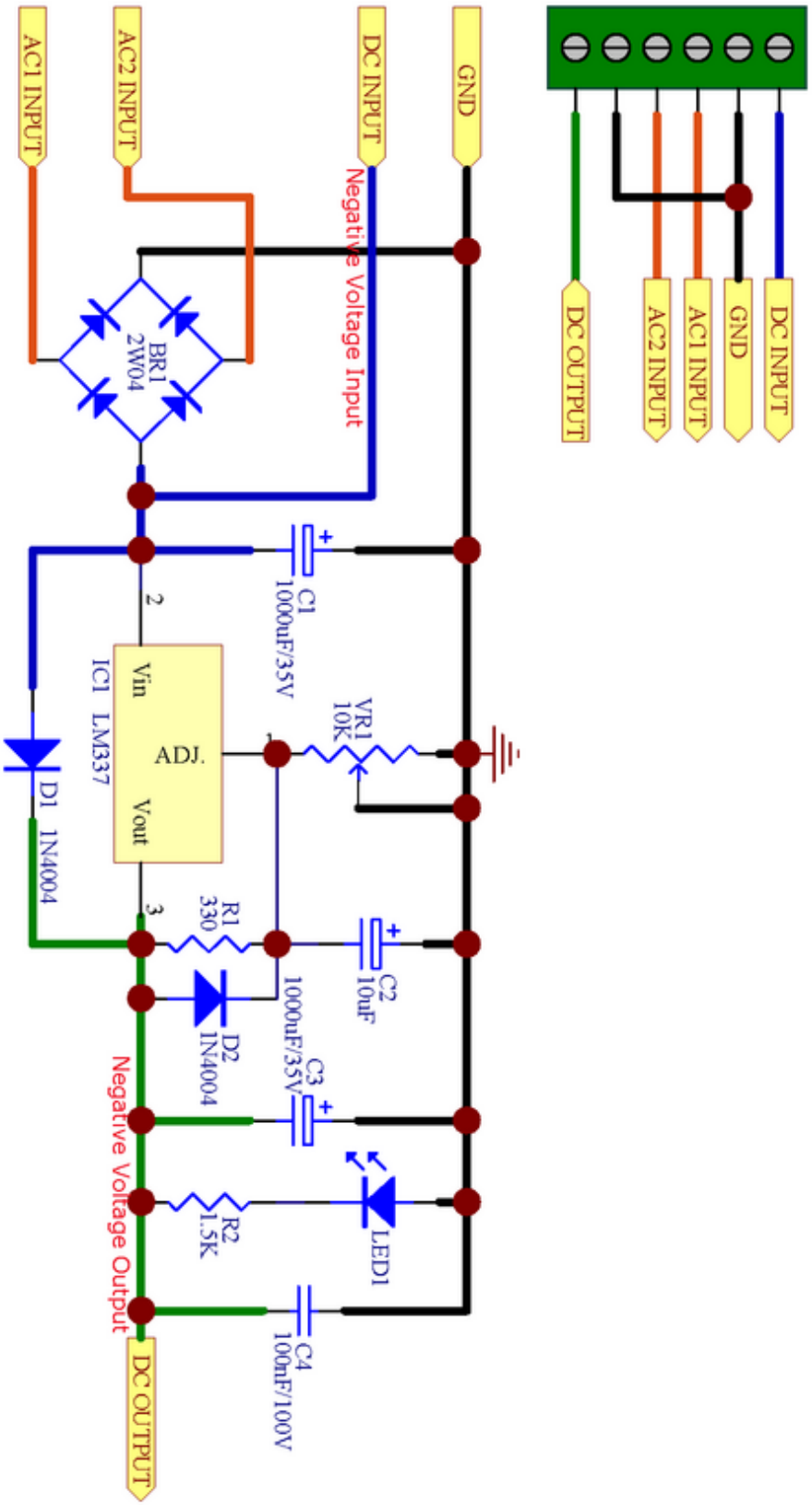
DC INPUT
GND
AC1 INPUT
AC2 INPUT
DC OUTPUT
DC INPUT
GND
AC2 INPUT
AC1 INPUT
Negative Voltage Input
BR1
2W04
C1
1000uF/35V
VR1
10K
IC1 LM337
Vin
ADJ.
Vout
D1 1N4004
R1
330
C2
10uF
D2
1N4004
C3
1000uF/35V
LED1
R2
1.5K
C4
100nF/100V
Negative Voltage Output
DC OUTPUT